Arachidonic acid metabolism

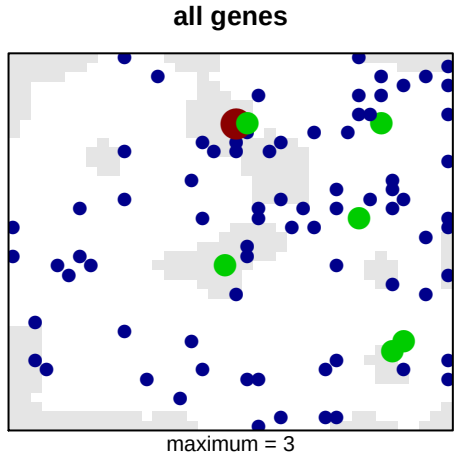

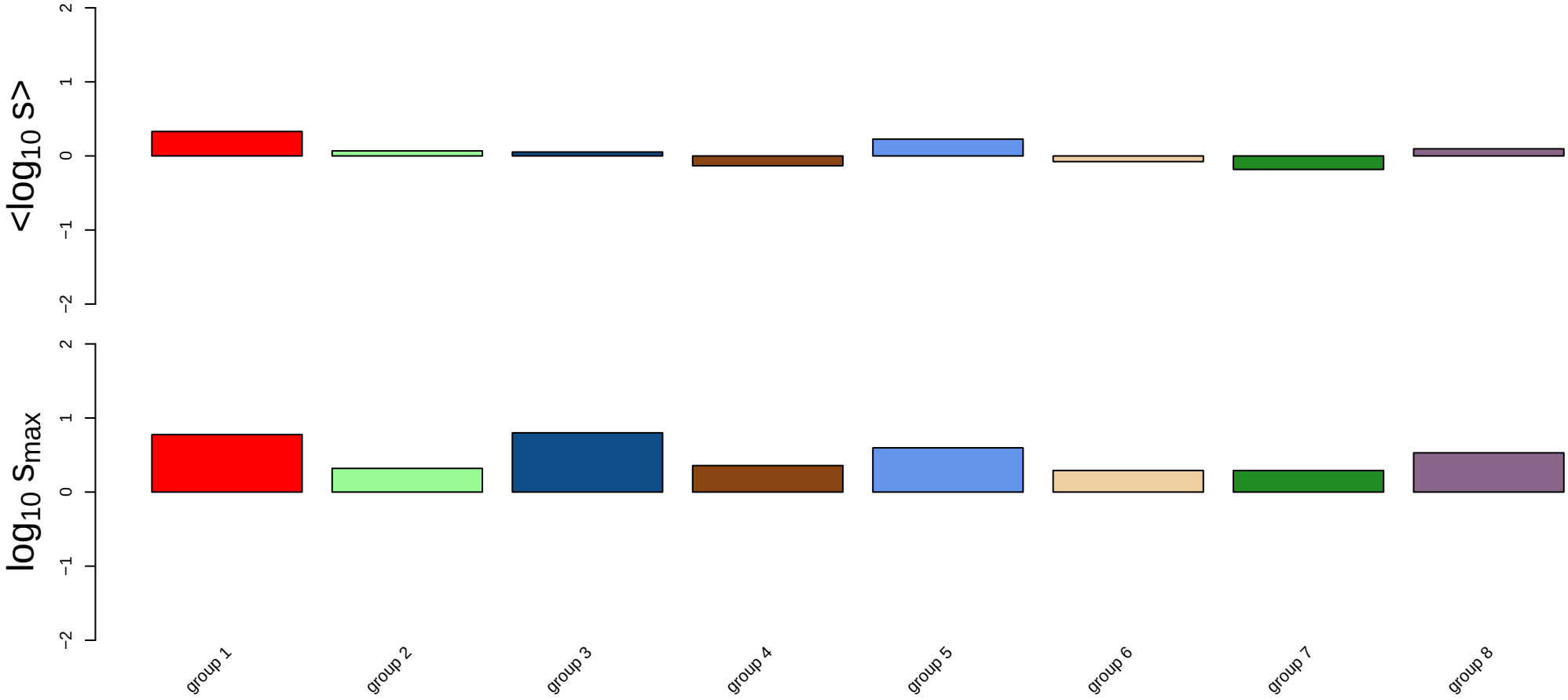

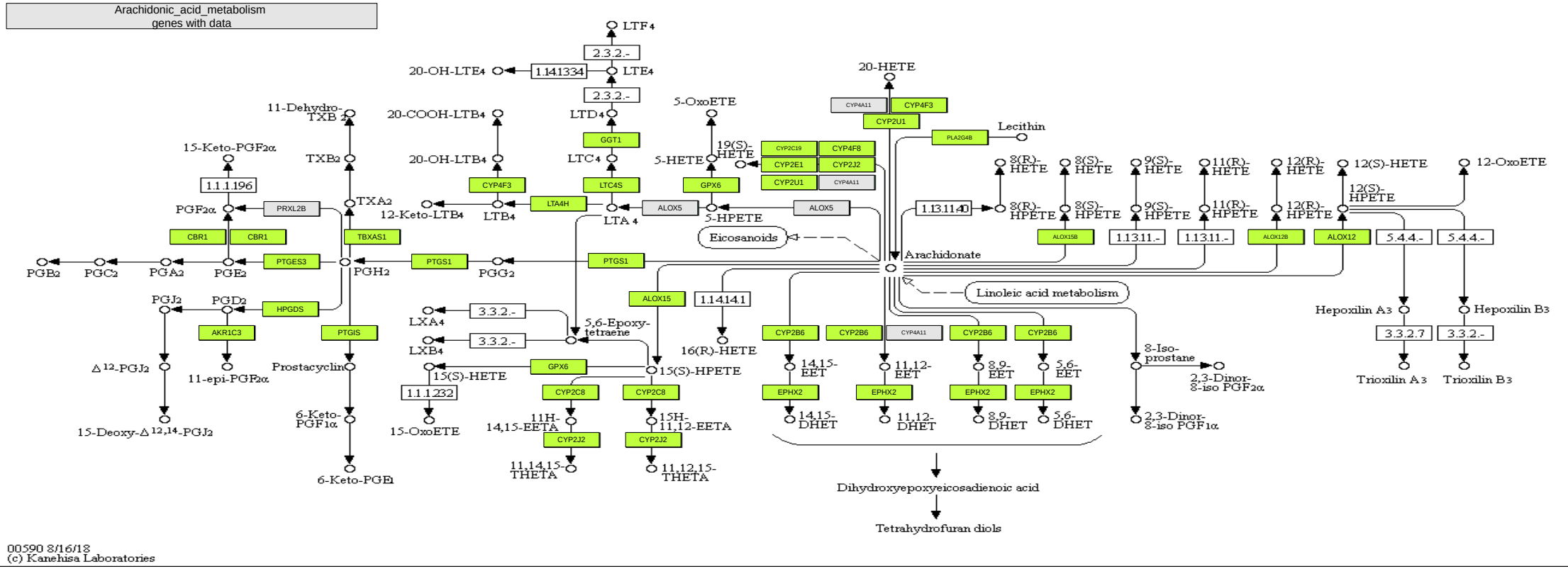
Arachidonic_acid_metabolism
genes with data
LTF4
2.3.2.-
20-OH-LTE4
1.14.1334
LTE4
2.3.2.-
LTD4
GGT1
LTC4
LTC4S
11-Dehydro-TXB2
20-COOH-LTB4
20-OH-LTB4
CYP4F3
LTB4
LTA4H
12-Keto-LTB4
LTA4
15-Keto-PGF2α
TXB2
1.1.1.196
PGF2α
PRXL2B
TXA2
CBR1
CBR1
TBXAS1
PGB2
PGC2
PGA2
PGE2
PTGES3
PGH2
PTGS1
PGG2
PTGS1
PGJ2
PGD2
HPGDS
AKR1C3
PTGIS
Δ12-PGJ2
11-epi-PGF2α
Prostacyclin
15-Deoxy-Δ12,14-PGJ2
6-Keto-PGF1α
6-Keto-PGE1
5-OxoETE
19(S)-HETE
5-HETE
GPX6
ALOX5
ALOX5
5-HPETE
Eicosanoids
3.3.2.-
LXA4
3.3.2.-
LXB4
5,6-Epoxy-tetraene
15(S)-HETE
1.1.1.232
15-OxoETE
GPX6
15(S)-HPETE
ALOX15
1.14.14.1
16(R)-HETE
CYP2C8
CYP2C8
11H-14,15-EETA
15H-11,12-EETA
CYP2J2
CYP2J2
11,14,15-THETA
11,12,15-THETA
20-HETE
CYP4A11
CYP4F3
CYP2U1
Lecithin
PLA2G4B
CYP2C19
CYP4F8
CYP2E1
CYP2J2
CYP2U1
CYP4A11
1.13.11.40
8(R)-HETE
8(S)-HETE
9(S)-HETE
11(R)-HETE
12(R)-HETE
12(S)-HETE
12-OxoETE
8(R)-HPETE
8(S)-HPETE
9(S)-HPETE
11(R)-HPETE
12(R)-HPETE
12(S)-HPETE
ALOX15B
1.13.11.-
1.13.11.-
ALOX12B
ALOX12
5.4.4.-
5.4.4.-
Arachidonate
Linoleic acid metabolism
CYP2B6
CYP2B6
CYP4A11
CYP2B6
CYP2B6
14,15-EET
11,12-EET
8,9-EET
5,6-EET
EPHX2
EPHX2
EPHX2
EPHX2
14,15-DHET
11,12-DHET
8,9-DHET
5,6-DHET
8-Iso-prostane
2,3-Dinor-8-iso PGF2α
2,3-Dinor-8-iso PGF1α
Hepoxilin A3
Hepoxilin B3
3.3.2.7
3.3.2.-
Trioxilin A3
Trioxilin B3
Dihydroxyepoxyeicosadienoic acid
Tetrahydrofuran diols
00590 8/16/18
(c) Kanehisa Laboratories

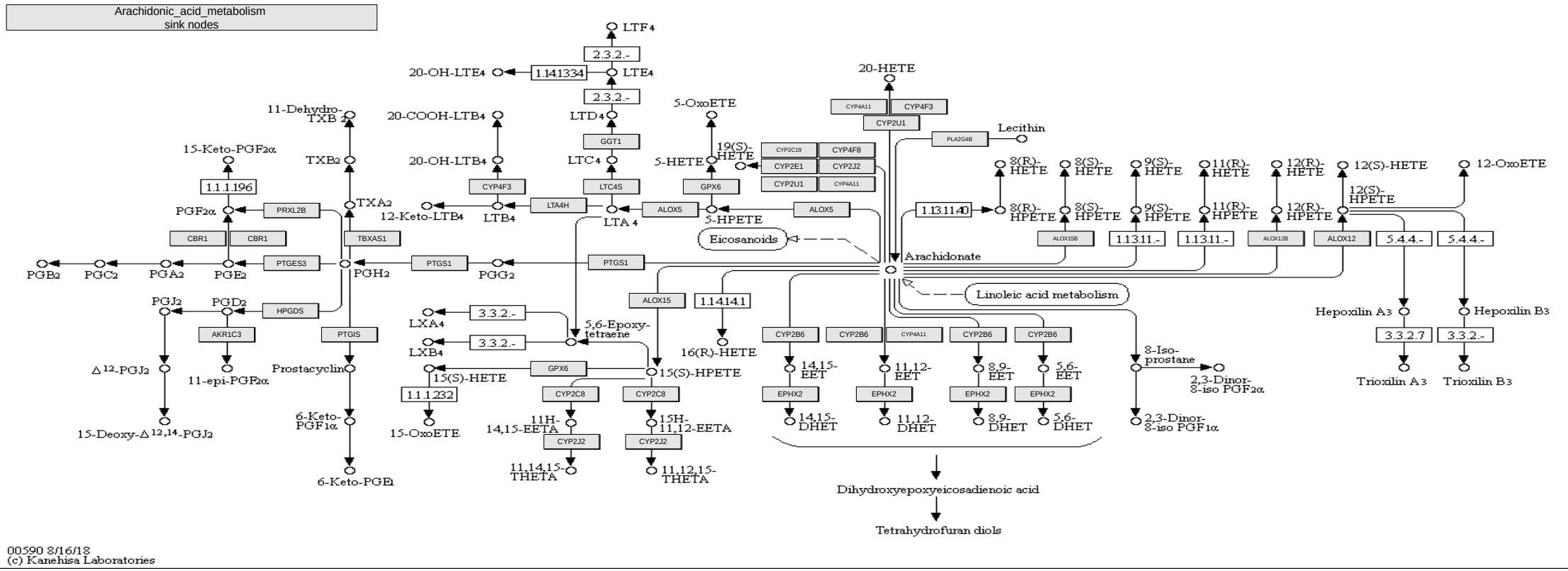

00590 8/16/18
(c) Kanehisa Laboratories

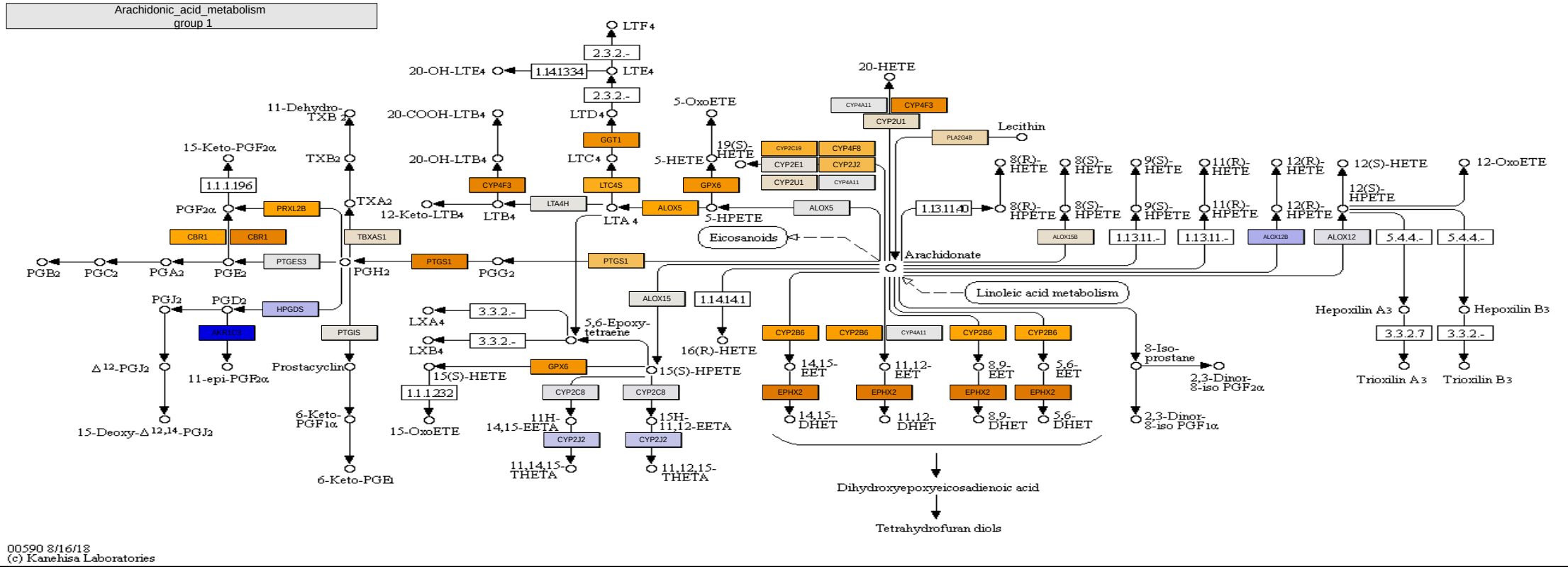
Arachidonic_acid_metabolism
group 1
LTF4
2.3.2.-
20-OH-LTE4
1.14.1334
LTE4
2.3.2.-
LTD4
GGT1
LTC4
LTC4S
GPX6
5-OxoETE
19(S)-HETE
5-HETE
20-HETE
CYP4A11
CYP4F3
CYP2U1
Lecithin
PLA2G4B
11-Dehydro-TXB2
20-COOH-LTB4
20-OH-LTB4
CYP4F3
LTA4H
LTB4
12-Keto-LTB4
ALOX5
5-HPETE
ALOX5
Eicosanoids
15-Keto-PGF2α
TXB2
1.1.1.196
PGF2α
PRXL2B
TXA2
CBR1
CBR1
TBXAS1
PGB2
PGC2
PGA2
PGE2
PTGES3
PGH2
PTGS1
PGG2
PTGS1
Arachidonate
1.13.11.40
8(R)-HETE
8(S)-HETE
9(S)-HETE
11(R)-HETE
12(R)-HETE
12(S)-HETE
12-OxoETE
8(R)-HPETE
8(S)-HPETE
9(S)-HPETE
11(R)-HPETE
12(R)-HPETE
12(S)-HPETE
ALOX15B
1.13.11.-
1.13.11.-
ALOX12B
ALOX12
5.4.4.-
5.4.4.-
Linoleic acid metabolism
PGJ2
PGD2
HPGDS
AKR1C3
PTGIS
Δ12-PGJ2
11-epi-PGF2α
Prostacyclin
15-Deoxy-Δ12,14-PGJ2
6-Keto-PGF1α
6-Keto-PGE1
3.3.2.-
LXA4
3.3.2.-
LXB4
15(S)-HETE
1.1.1.232
15-OxoETE
5,6-Epoxy-tetraene
GPX6
CYP2C8
CYP2C8
11H-14,15-EETA
15H-11,12-EETA
CYP2J2
CYP2J2
11,14,15-THETA
11,12,15-THETA
ALOX15
1.14.14.1
16(R)-HETE
15(S)-HPETE
CYP2B6
CYP2B6
CYP4A11
CYP2B6
CYP2B6
14,15-EET
11,12-EET
8,9-EET
5,6-EET
EPHX2
EPHX2
EPHX2
EPHX2
14,15-DHET
11,12-DHET
8,9-DHET
5,6-DHET
8-Iso-prostane
2,3-Dinor-8-iso PGF2α
2,3-Dinor-8-iso PGF1α
Hepoxilin A3
Hepoxilin B3
3.3.2.7
3.3.2.-
Trioxilin A3
Trioxilin B3
Dihydroxyepoxyeicosadienoic acid
Tetrahydrofuran diols
00590 8/16/18
(c) Kanehisa Laboratories

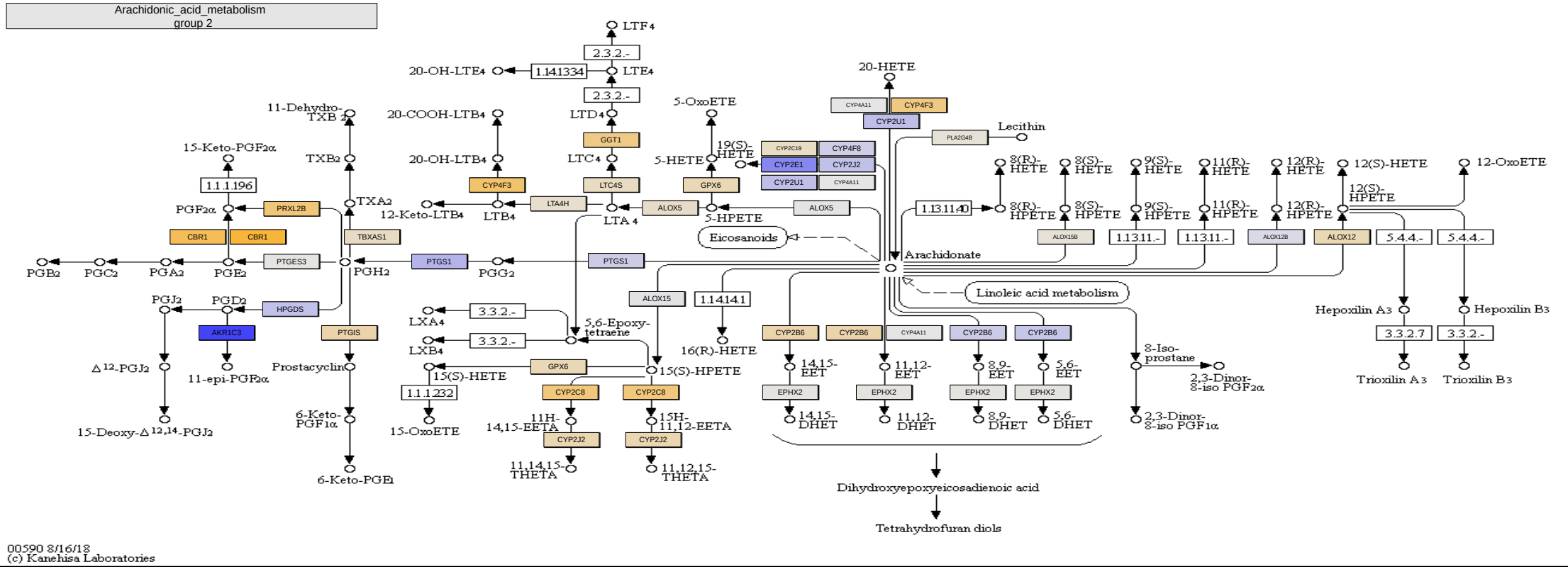
Arachidonic_acid_metabolism
group 2
LTF4
2.3.2.-
20-OH-LTE4
1.14.1334
LTE4
2.3.2.-
LTD4
GGT1
LTC4
LTC4S
LTA4
LTA4H
LTB4
CYP4F3
20-COOH-LTB4
20-OH-LTB4
12-Keto-LTB4
5-OxoETE
5-HETE
19(S)-HETE
GPX6
ALOX5
5-HPETE
CYP2C19
CYP4F8
CYP2E1
CYP2J2
CYP2U1
CYP4A11
20-HETE
CYP4A11
CYP4F3
CYP2U1
PLA2G4B
Lecithin
11-Dehydro-TXB2
TXB2
TXA2
TBXAS1
15-Keto-PGF2α
1.1.1.196
PGF2α
PRXL2B
CBR1
CBR1
PGB2
PGC2
PGA2
PGE2
PTGES3
PGH2
PTGS1
PGG2
PTGS1
Eicosanoids
Arachidonate
Linoleic acid metabolism
8(R)-HETE
8(S)-HETE
9(S)-HETE
11(R)-HETE
12(R)-HETE
12(S)-HETE
12-OxoETE
1.13.11.40
8(R)-HPETE
8(S)-HPETE
9(S)-HPETE
11(R)-HPETE
12(R)-HPETE
12(S)-HPETE
ALOX15B
1.13.11.-
1.13.11.-
ALOX12B
ALOX12
5.4.4.-
5.4.4.-
Hepoxilin A3
Hepoxilin B3
3.3.2.7
3.3.2.-
Trioxilin A3
Trioxilin B3
PGJ2
PGD2
HPGDS
AKR1C3
PTGIS
Δ12-PGJ2
11-epi-PGF2α
Prostacyclin
15-Deoxy-Δ12,14-PGJ2
6-Keto-PGF1α
6-Keto-PGE1
LXA4
3.3.2.-
LXB4
3.3.2.-
5,6-Epoxy-tetraene
15(S)-HETE
GPX6
15(S)-HPETE
1.1.1.232
15-OxoETE
CYP2C8
CYP2C8
11H-14,15-EETA
15H-11,12-EETA
CYP2J2
CYP2J2
11,14,15-THETA
11,12,15-THETA
ALOX15
1.14.14.1
16(R)-HETE
CYP2B6
CYP2B6
CYP4A11
CYP2B6
CYP2B6
14,15-EET
11,12-EET
8,9-EET
5,6-EET
EPHX2
EPHX2
EPHX2
EPHX2
14,15-DHET
11,12-DHET
8,9-DHET
5,6-DHET
8-Iso-prostane
2,3-Dinor-8-iso PGF2α
2,3-Dinor-8-iso PGF1α
Dihydroxyepoxyeicosadienoic acid
Tetrahydrofuran diols
00590 8/16/18
(c) Kanehisa Laboratories

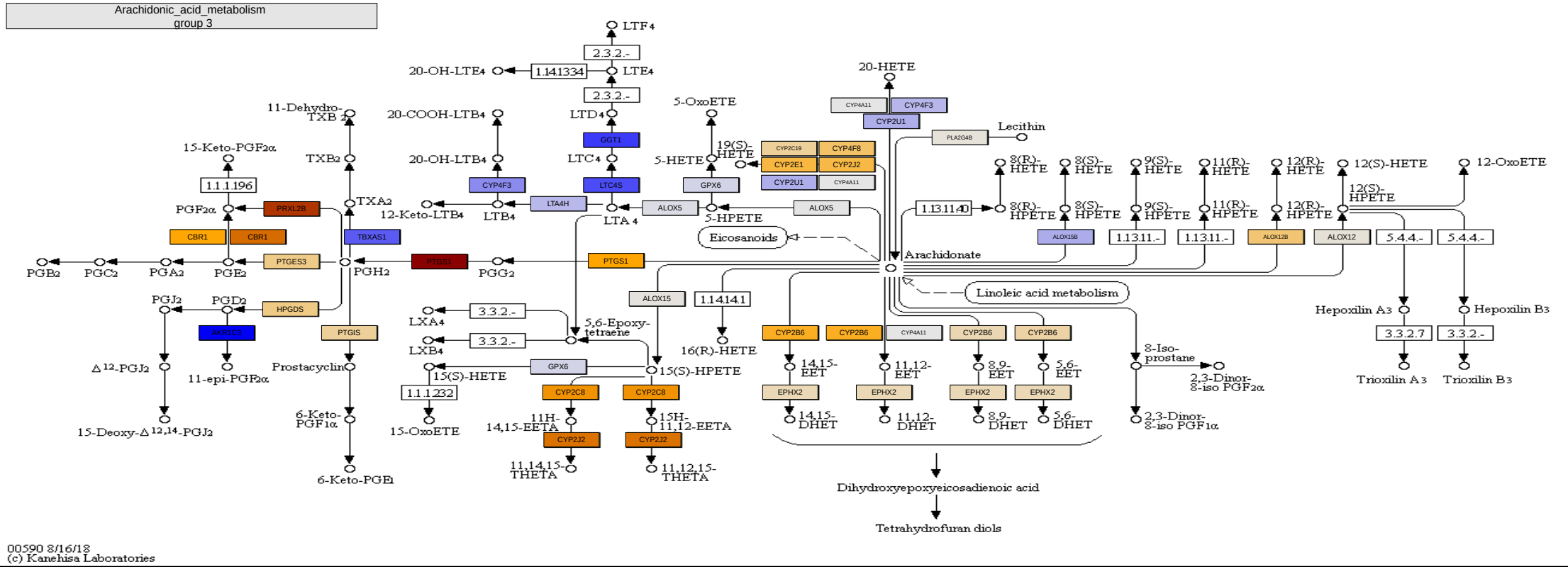

00590 8/16/18
(c) Kanehisa Laboratories

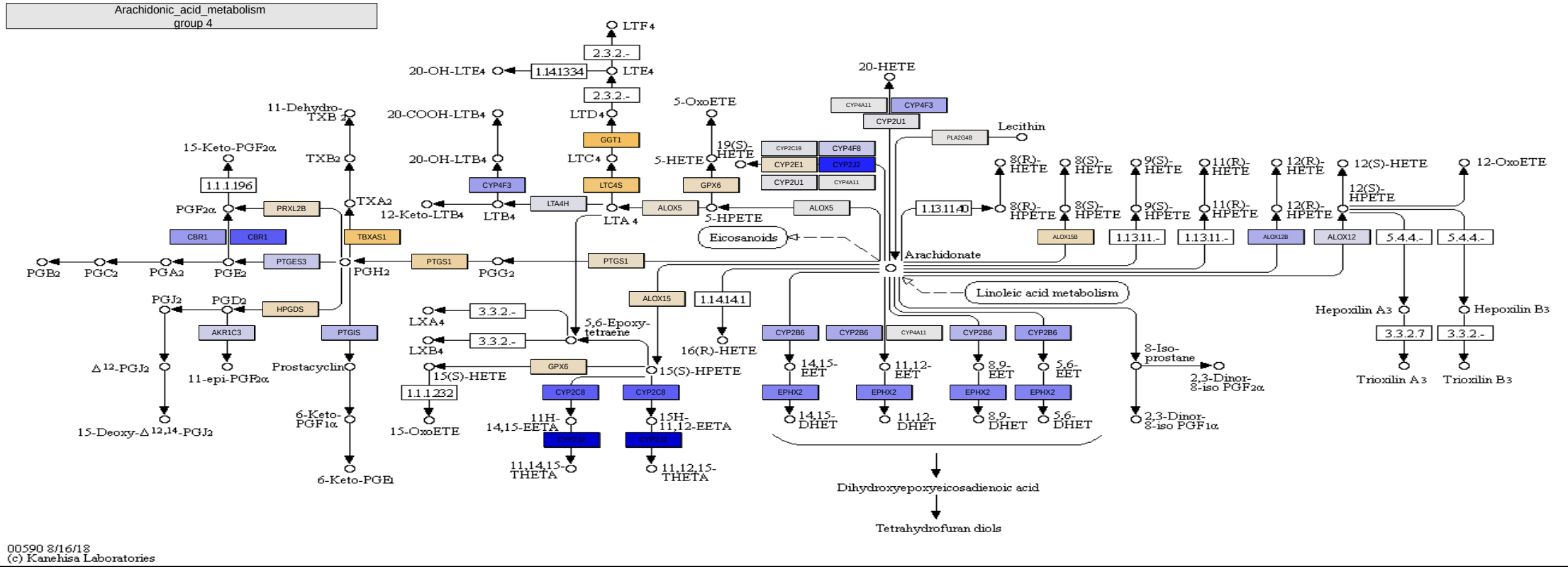

00590 8/16/18
(c) Kanehisa Laboratories

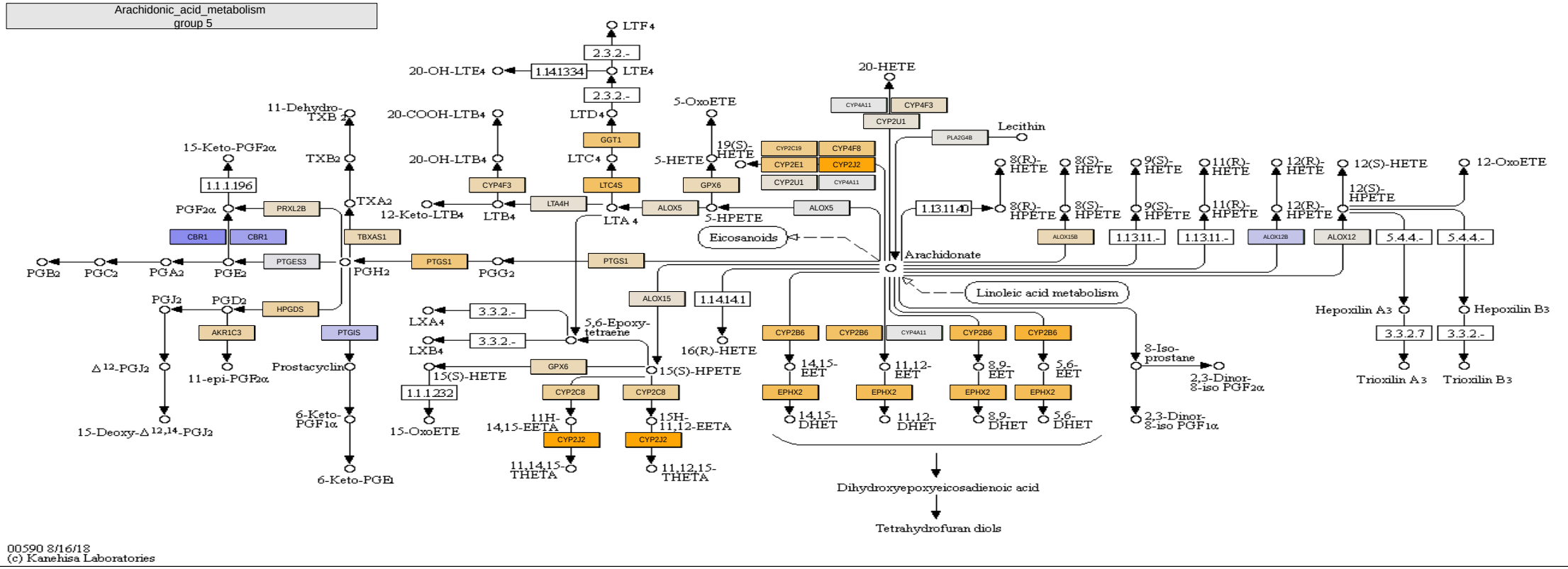

00590 8/16/18
(c) Kanehisa Laboratories

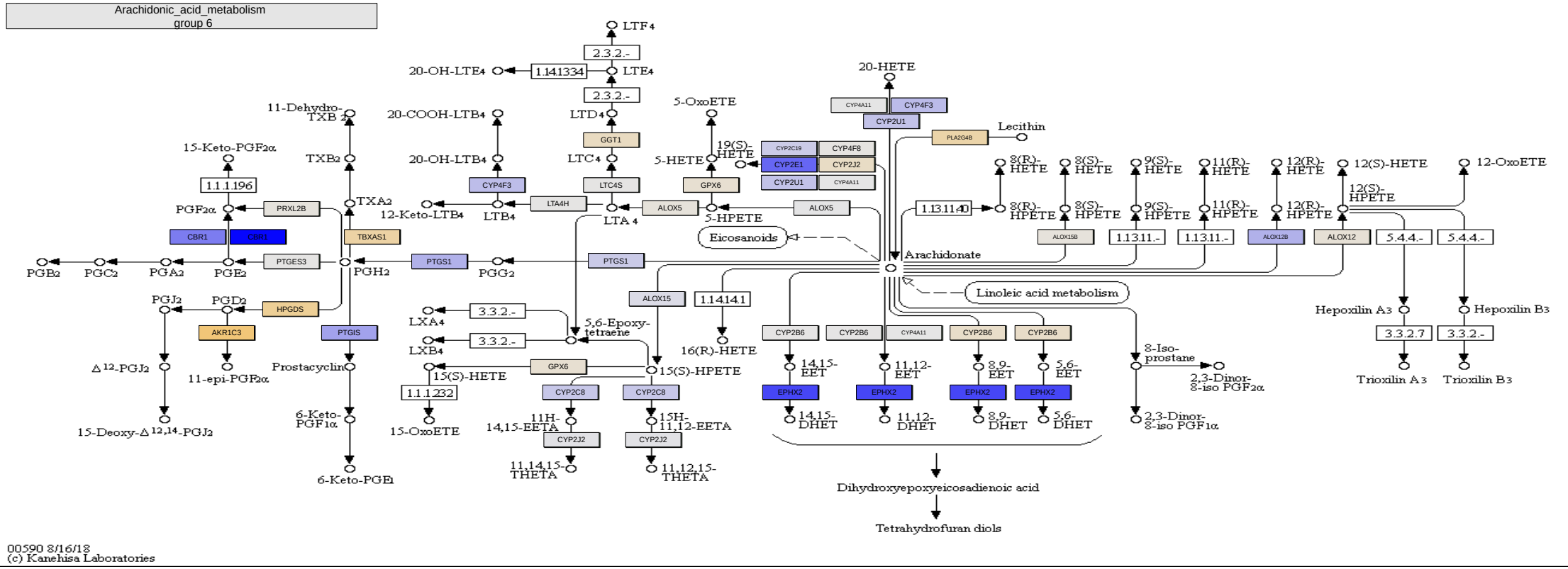
Arachidonic_acid_metabolism
group 6
LTF4
2.3.2.-
20-OH-LTE4
1.14.1334
LTE4
2.3.2.-
LTD4
GGT1
LTC4
LTC4S
LTA4
LTA4H
LTB4
CYP4F3
20-COOH-LTB4
20-OH-LTB4
12-Keto-LTB4
5-OxoETE
5-HETE
19(S)-HETE
GPX6
ALOX5
5-HPETE
CYP2C19
CYP4F8
CYP2E1
CYP2J2
CYP2U1
CYP4A11
20-HETE
CYP4A11
CYP4F3
CYP2U1
PLA2G4B
Lecithin
11-Dehydro-TXB2
TXB2
TXA2
15-Keto-PGF2α
1.1.1.196
PGF2α
PRXL2B
CBR1
CBR1
TBXAS1
PGB2
PGC2
PGA2
PGE2
PTGES3
PGH2
PTGS1
PGG2
PTGS1
Eicosanoids
Arachidonate
Linoleic acid metabolism
8(R)-HETE
8(S)-HETE
9(S)-HETE
11(R)-HETE
12(R)-HETE
12(S)-HETE
12-OxoETE
1.13.11.40
8(R)-HPETE
8(S)-HPETE
9(S)-HPETE
11(R)-HPETE
12(R)-HPETE
12(S)-HPETE
ALOX15B
1.13.11.-
1.13.11.-
ALOX12B
ALOX12
5.4.4.-
5.4.4.-
Hepoxilin A3
Hepoxilin B3
3.3.2.7
3.3.2.-
Trioxilin A3
Trioxilin B3
PGJ2
PGD2
HPGDS
AKR1C3
PTGIS
Δ12-PGJ2
11-epi-PGF2α
Prostacyclin
15-Deoxy-Δ12,14-PGJ2
6-Keto-PGF1α
6-Keto-PGE1
LXA4
3.3.2.-
LXB4
3.3.2.-
5,6-Epoxy-tetraene
15(S)-HETE
GPX6
1.1.1.232
15-OxoETE
CYP2C8
CYP2C8
11H-14,15-EETA
15H-11,12-EETA
CYP2J2
CYP2J2
11,14,15-THETA
11,12,15-THETA
ALOX15
1.14.14.1
16(R)-HETE
15(S)-HPETE
CYP2B6
CYP2B6
CYP4A11
CYP2B6
CYP2B6
14,15-EET
11,12-EET
8,9-EET
5,6-EET
EPHX2
EPHX2
EPHX2
EPHX2
14,15-DHET
11,12-DHET
8,9-DHET
5,6-DHET
8-Iso-prostane
2,3-Dinor-8-iso PGF2α
2,3-Dinor-8-iso PGF1α
Dihydroxyepoxyeicosadienoic acid
Tetrahydrofuran diols
00590 8/16/18
(c) Kanehisa Laboratories

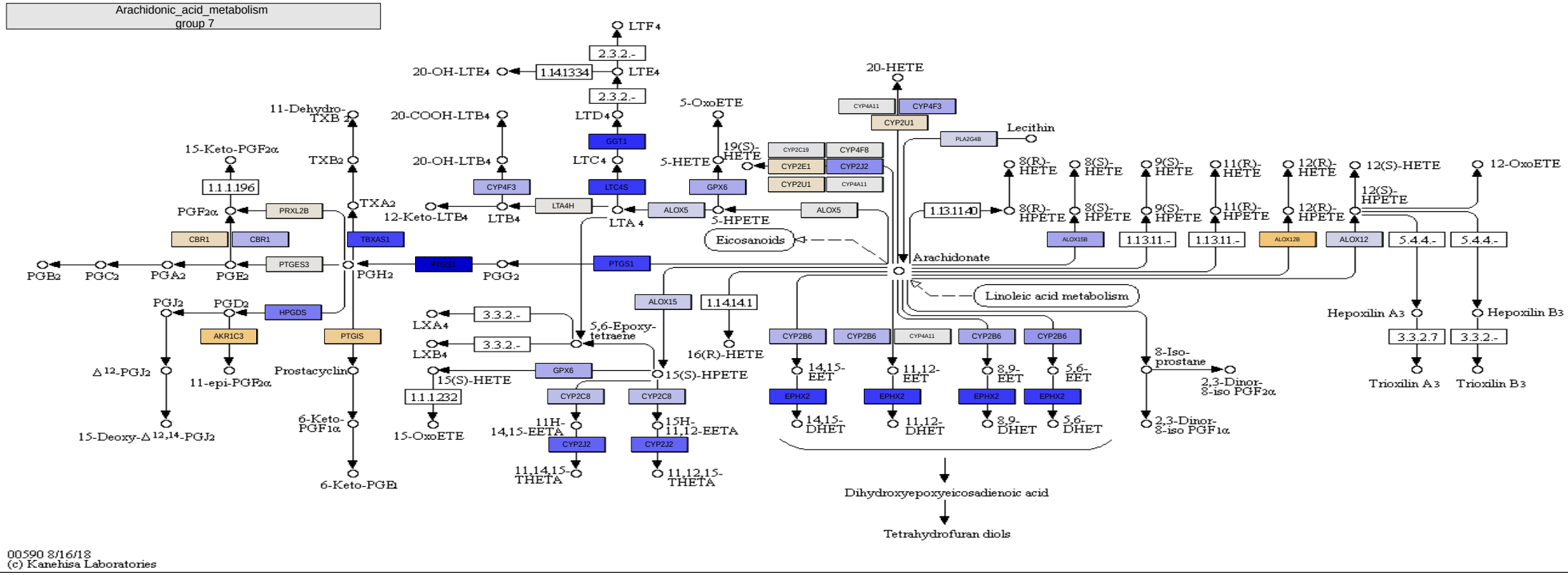

00590 8/16/18
(c) Kanehisa Laboratories

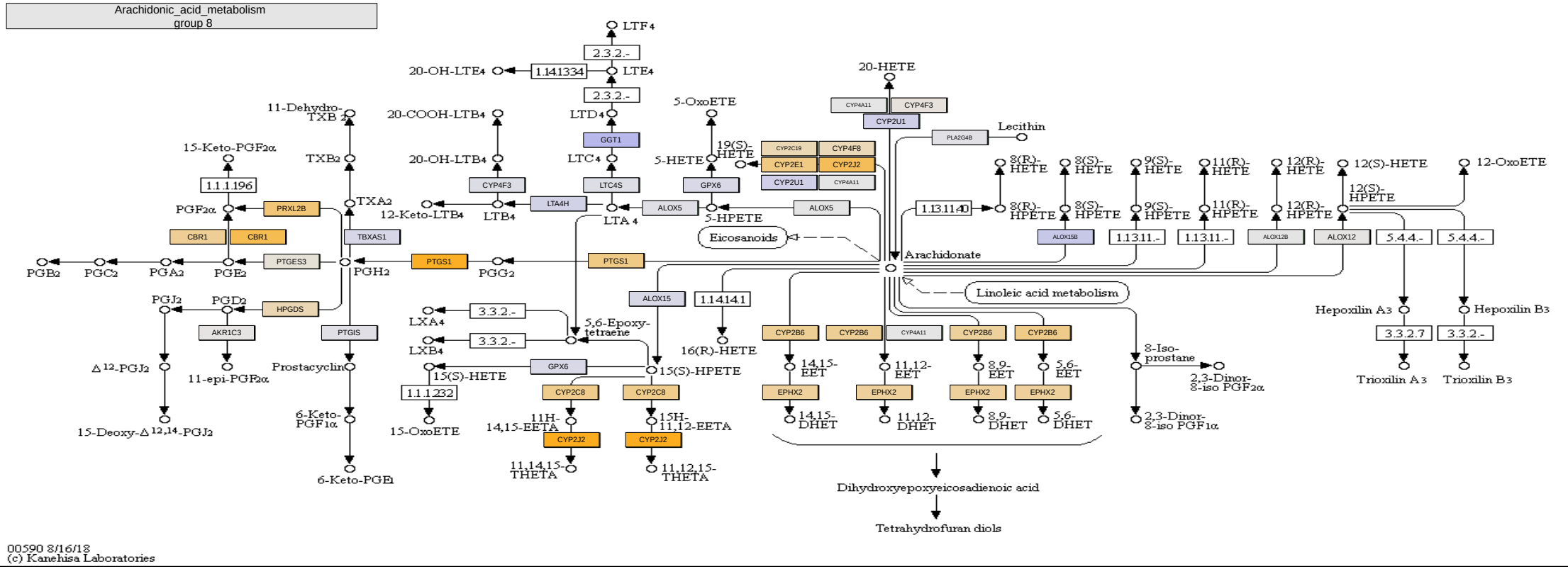
Arachidonic_acid_metabolism
group 8
LTF4
2.3.2.-
20-OH-LTE4
1.14.1334
LTE4
2.3.2.-
LTD4
GGT1
LTC4
LTC4S
LTA4H
LTA4
ALOX5
5-HPETE
GPX6
5-HETE
5-OxoETE
19(S)-HETE
CYP2C19
CYP4F8
CYP2E1
CYP2J2
CYP2U1
CYP4A11
20-HETE
CYP4A11
CYP4F3
CYP2U1
Lecithin
PLA2G4B
1.13.11.40
8(R)-HETE
8(S)-HETE
9(S)-HETE
11(R)-HETE
12(R)-HETE
12(S)-HETE
12-OxoETE
8(R)-HPETE
8(S)-HPETE
9(S)-HPETE
11(R)-HPETE
12(R)-HPETE
12(S)-HPETE
ALOX15B
1.13.11.-
1.13.11.-
ALOX12B
ALOX12
5.4.4.-
5.4.4.-
Hepoxilin A3
Hepoxilin B3
3.3.2.7
3.3.2.-
Trioxilin A3
Trioxilin B3
11-Dehydro-TXB2
TXB2
TXA2
TBXAS1
15-Keto-PGF2α
1.1.1.196
PGF2α
PRXL2B
CBR1
CBR1
PGB2
PGC2
PGA2
PGE2
PTGES3
PGH2
PTGS1
PGG2
PTGS1
Eicosanoids
Arachidonate
Linoleic acid metabolism
20-COOH-LTB4
20-OH-LTB4
CYP4F3
12-Keto-LTB4
LTB4
PGJ2
PGD2
HPGDS
AKR1C3
PTGIS
Δ12-PGJ2
11-epi-PGF2α
Prostacyclin
15-Deoxy-Δ12,14-PGJ2
6-Keto-PGF1α
6-Keto-PGE1
3.3.2.-
LXA4
3.3.2.-
LXB4
5,6-Epoxy-tetraene
GPX6
15(S)-HETE
1.1.1.232
15-OxoETE
CYP2C8
CYP2C8
11H-14,15-EETA
15H-11,12-EETA
CYP2J2
CYP2J2
11,14,15-THETA
11,12,15-THETA
ALOX15
1.14.14.1
16(R)-HETE
15(S)-HPETE
CYP2B6
CYP2B6
CYP4A11
CYP2B6
CYP2B6
14,15-EET
11,12-EET
8,9-EET
5,6-EET
EPHX2
EPHX2
EPHX2
EPHX2
14,15-DHET
11,12-DHET
8,9-DHET
5,6-DHET
8-Iso-prostane
2,3-Dinor-8-iso PGF2α
2,3-Dinor-8-iso PGF1α
Dihydroxyepoxyeicosadienoic acid
Tetrahydrofuran diols
00590 8/16/18
(c) Kanehisa Laboratories